Parts List				
ITEM	QTY	PART No.	DESCRIPTION	MATERIAL
1	1	BA5927	Ø43 TP Rec 20k Long-term MP 9/16"	S32750 SUPER DUPLEX

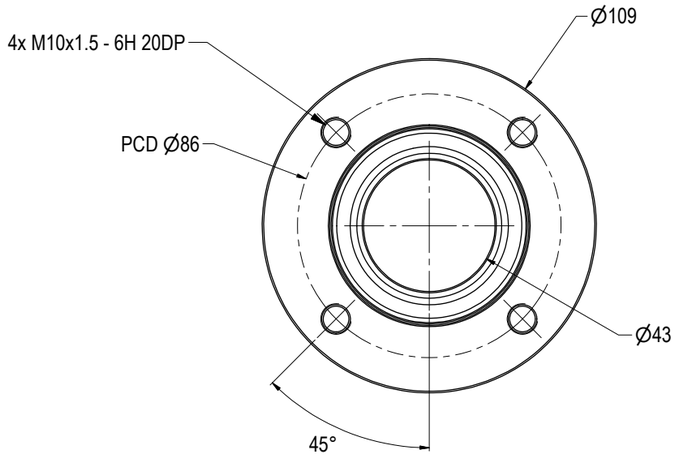

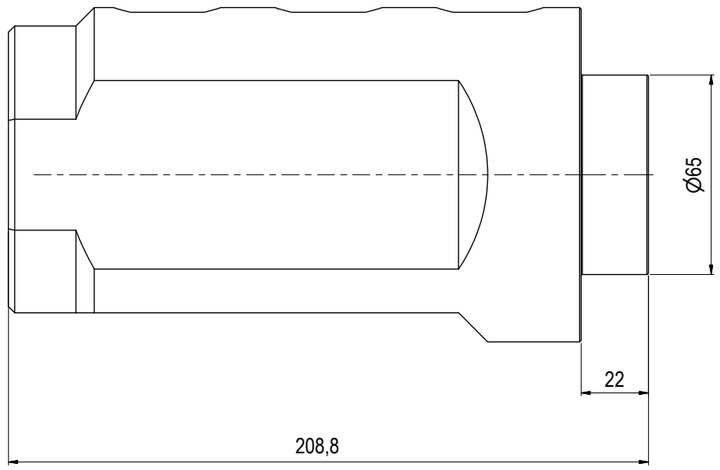

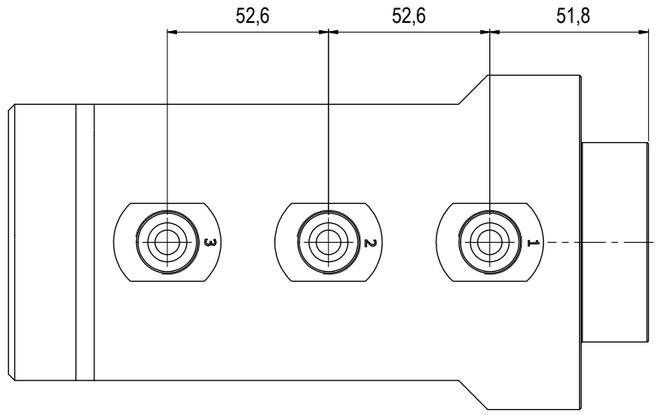

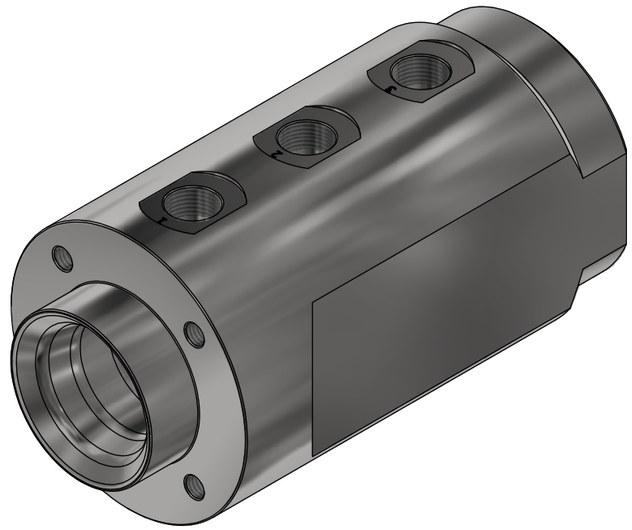

NOTE: 1
DESIGN CODE:
API 17H Type 1
API 6A (PSL 3)

NOTE: 2
TECHNICAL CLASSIFICATION:

Article Type:	001-Hot Stabs
Main Group:	1.03. Ø43 Hot Stab
Intermediate Group:	1.2.02. Receptacle
Sub Group:	1.2.6.03. Triple

NOTE: 3
INTERFACE INFORMATION:

Pressure Rating Bar:	1380
Design Water Depth:	N/A
Material:	S32750 SUPER DUPLEX
Weight in Air:	9,9 kg
Volume:	1,26 dm^3
Submerged Weight:	8,6 kg
Surface Area:	1141 cm^2
Hydraulic:	9/16" MP
Mechanical:	4xM10@PCD 86
Electrical:	N/A
Com. & Protocol:	N/A

NOTE: 4
ADDITIONAL INFORMATION:
Other hydraulic port interface can be delivered on customers request.

Rev.	Date	Reason for issue	Revision change	Made	Chk'd	Appr.
01	19.11.2021	9-IFU (Issued for Use)		WTJ	HNJ	WTJ

BLUE LOGIC

This Drawing is the Property of Blue Logic AS © and must Not be Loaned, Reproduced or Transferred to others without written Permission

Dwg Scale: NTS
Dwg Proj:
Dwg Format: A3

Drawing title: Ø43 TP Rec 20k Long-term MP 9/16"

Drawing number: BA5927

Rev. 01